ZMJ100XD
Density Monitor

LANSO®

SF6 measuring

Description

These instruments are used to monitor SF_6 gas density in sealed tanks. They are applied to indicate gas density and to provide a signal outputs when the density reaches preset threshold values. They are designed to monitor High Voltage systems.

Application

- SF_6 Gas Insulated Switchgear (GIS)
- SF_6 Insulated Circuit Breakers
- SF_6 Insulated Pole-Mounted Switch
- SF_6 Insulated Transformers
- SF_6 Insulated Mutual Inductor
- SF_6 Insulated Busbar Systems

Options:

- Different measuring ranges
- Wide temperature range -50℃ to +60℃
- Can detect SF_6, Air, N_2, SF_6+N_2 and other gases

Features

- Using gas compensation, higher set point accuracy
- Class 1.0 display for full scale
- Suitable for indoor or outdoor installation
- Micro switch, can switch freely between normally open and normally closed points
- Up to four pairs of nodes, multiple options such as double alarms and double locks can be realized, making monitoring more secure and reliable
- High shock resistance
- No need to fill oil, no oil leakage hazard
- Normally closed contacts will not falsely alarm due to vibration

Technical Data

Scale range: -0.1 to 0.9MPa (customizable)

Set point Accuracy:

a) +20±1℃, ±1.0%FS

b) −30~+60℃, ±1.5%FS (gas phase)

Indication accuracy:

a) rated pressure: +20±1℃, ±1.0%FS

b) −20~+60℃, ±1.8%FS (gas phase)

c) −30~-20℃, ±2.3%FS (gas phase)

Degree of protection: IP65

Ambient conditions: -40℃ to 60℃

Leakage rate:

$< 1 \times 10^{-9}$ Pa · m^3/s ,Relative humidity ⩽ 95%RH

Pressure connection: M20 × 1.5, (customizable)

Location: Bottom or back

Electrical connection:

Connect the plug when plugging,

wire diameter 0.2...2.5 mm^2

Insulation properties:

Insulation resistance: >100 MΩ (500 V DC)

Withstand voltage: 2kV, 50/60 Hz 1 min (to case)

Impact rating: 50g

Contact ratings: 10(1.5)A,250V AC

0.1 (0.05)A,250V DC

Weight: 1.0kg

Pressure−sensitive components:

bellows and Bowden tubes

ZMJ100XD
Density Monitor

LANSO®

SF6 measuring
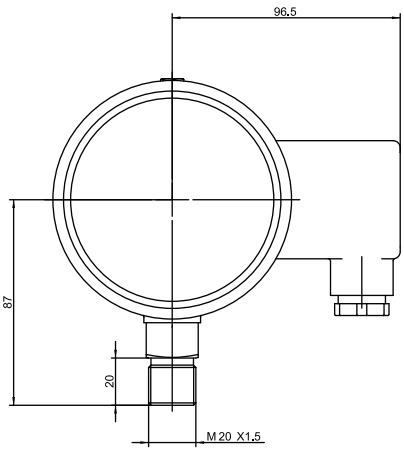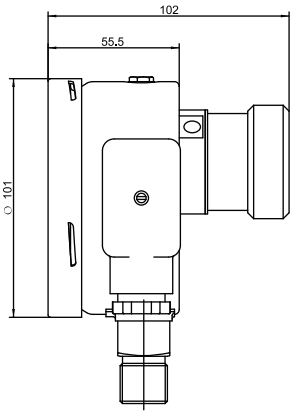
Dimensions